TOTAL FACILITY SOLUTIONS (800) 274-8730 www.liftandaircompressor.com

MODEL 370 INSTALLATION MANUAL

AirVolution
By MacroAir

Table of Contents

Caution & Safety 2
Fusing Chart 4
Fan Placement 5
Fan Clearance & Placement 6
Fan Dimensions 7
Fan Components & Tools 8

Step 1A - Rapid Mount Commercial Installation 9
Rapid Mount Commercial 10
1.1A Unistrut Span Mounting 11
1.2A I-Beam Mounting 12
1.3A Glulam/Wood Beam Mounting (Option 1) 14
1.4A Glulam/Wood Beam Mounting (Option 2) 16

Step 1B - Standard Mount Installation 19
Standard Mount 20
1.1B Unistrut Span Mounting 22
1.2B I-Beam Mounting 23
1.3B Glulam/Wood Beam Mounting (Option 1) 24

Step 2A - Extension and Motor Unit Installation for Rapid Mount Commercial 26
2.1A Extension and Motor Unit Installation 27

Step 2B - Extension and Motor Unit Installation for Standard Mount 28
2.1B Extension and Motor Unit Installation 29

Step 3 - Safety Cable and Electrical Installation 30
3.1 Touchpad Remote Mounting 31
3.2 Safety Cable & Electrical Installation 33
3.3 Fuse Disconnect Switch Drawings 34
3.3 Fuse Disconnect Switch Installation 35
3.4 Emergency Disconnect Schematic 36

Step 4 - Guy Wire Installation 37
4.1 Guy Wire Installation 38
4.2 Guy Wire Cord Installation 40

Step 5 - Airfoil Installation 41
4.1 Airfoil Installation 42

Step 6 - Touchpad Remote Navigation and Operation 45
6.1 Touchpad Remote Navigation 46
6.2 Touchpad Remote Operation 47

Maintenance Information 48
Warranty and Technical Support 49

Caution & Safety

READ THE ENTIRE MANUAL BEFORE OPERATING THE FAN. Ensure that all safety practices and instructions are followed during the installation, operation and servicing of the fan. Failure to apply these safety practices could result in death or serious injury. If you do not understand the instructions please call our Technical Department for guidance (Technical Support contact information can be found on page 49).

The fan installation should follow the recommendations outlined in this manual. MacroAir is not responsible for any injury or damage to people or property as a result of the user and/or installer not complying with the recommendations outlined in this manual.

All fan controls and incoming power should only be installed by qualified technicians familiar with the requirements of the NEC and local codes. Refer to appropriate portions of this manual for other important requirements. Failure to follow these guidelines will void the manufacturer's warranty.

NOTICE: All electrical controls are configured at the factory and are ready to use. No user adjustments are available. Follow the included wiring schematics and installation instructions when installing this device to ensure proper operation. Do not make any changes to any part of the fan without first consulting MacroAir.

Installation is to be in accordance with the national electrical code, ANSI/NFPA 70-1999 and local codes.

HAZARD OF ELECTRIC SHOCK, EXPLOSION, OR ARC FLASH.

Read and understand this manual before installing or operating a fan unit. Installation, adjustment, repair, or maintenance must be performed by qualified personnel.

The user is responsible for compliance with all international and national electrical code requirements with respect to grounding of all equipment.

Many of the parts of this unit operate at line voltage. **DO NOT TOUCH.**

Install all covers before applying power or starting and stopping the unit.

DAMAGED EQUIPMENT

Do not operate or install any fans or fan accessories that appear to be damaged.

Failure to follow this instruction can result in death, serious injury, or equipment damage.

SERVICE:

If the fan does not operate properly using the procedures in this manual, **BE CERTAIN TO REMOVE ALL POWER TO THE UNIT** and contact our technical department for further assistance.

Keep all body parts clear of moving part at all times.

All electrical troubleshooting and repair must be done by a qualified technician and meet all applicable codes.

Caution & Safety

Key Safety System Components

MacroAir fans are engineered with key safety features to prevent pieces of the fan from falling in the unlikely event of a catastrophic failure. Used together, these systems and devices provide comprehensive protection of people, equipment and property. Follow the detailed instructions precisely when installing fans, including the following:

Install Safety cable on EVERY fan. The Safety cable, if installed per MacroAir specifications, will prevent the fan from falling in the unlikely event that the mounting system should fail. A MacroAir fan should never be run without a properly installed Safety cable, which is supplied with every fan along with all required hardware. You must install a Safety cable for the warranty to be in effect. **Refer to page 33.**

Mark the Floor to Alert Personnel

When mounting a fan in an area where materials may be elevated into its path, MacroAir recommends marking or painting the floor with a large crosshatched circle to alert personnel of the overhead location of fans.

Weight Considerations

We recommend that a building structure be capable of holding approximately twice the stated hanging weight of the fan. The maximum hanging weight for the Model 370 is 79 lbs including the weight of an additional extension. If there is any uncertainty in the strength of the building structure, a professional structural engineer should perform a thorough evaluation of the building prior to purchasing the fans. MacroAir provides guidelines for mounting fans; however, it is the sole responsibility of the building owner and installer to ensure the safety of the mounting system, that the building structure is sound and that the installation complies with all federal, state, and local codes.

Torque

The maximum torque (twisting force) that must be handled by the mounting system, including the building structure. For a Model 370, the maximum potential torque is 20 ft-lbs.

Check Federal, State, and Local Codes

Check all relevant codes to make sure that all product certifications, product listings, and building regulations are met. Code compliance is the responsibility of the installer.

Windy Conditions

Fans should not be operated when wind is present. Fans should not be installed in applications where it is frequently windy.

Fusing Chart

IT IS STRONGLY RECOMMENDED THAT THE FANS ARE FUSED TO PROTECT THE ELECTRICAL COMPONENTS.

Max Amp Draw / Recommended Fuse

Voltage and Phase	6ft	8ft	10ft	12ft
110 VAC 1-Phase	1.5A / 5	5.9A / 10	3.8A / 5	2.0A / 5
120 VAC 1-Phase	1.4A / 5	5.4A / 10	3.5A / 5	1.8A / 5
208 VAC 1-Phase	0.8A / 5	3.1A / 5	2.0A / 5	1.0A / 5

Reference page 35 for installation.

Fan Placement

Sprinkler Systems and Fan Placement

In any installation where fire sprinklers are in place, fan should not interfere with their correct operation. Fans should be located no less than 3 feet below a sprinkler, and placed central to each sprinkler quadrant. Our AirBrain motor controller can be connected to a fire suppression control system, which will emergency-stop fans in case of fire. Prior to installing fans, review all codes applicable to sprinkler systems and fans to ensure code compliance (refer to NFPA 13). Please call our Technical Department for guidance (Technical Support contact information can be found on page 49). However, it is your sole responsibility to see that the installation is completed to code and that it is correct.

Other Information on Placement and Spacing

If possible, avoid mounting fans directly below lights or skylights to avoid any strobe effect caused by moving airfoils. Note, a large fan, 20 – 24 feet in diameter, performs best at 20 to 30 feet above the floor, but acceptable performance has been demonstrated as low as 10 feet and as high as 50 feet.

If the building has a mezzanine, fans should be mounted so a person can not reach a fan in any way from the upper level/deck. Make certain that fans are positioned so that the airfoil tips are at least 3 feet away from any area where a person may be able to extend outward to reach them.

Fan Clearance & Placement

WARNING: FANS ARE NOT MEANT TO BE OPERATED IN WINDY CONDITIONS.

The minimum distance of a fan to a wall or similar obstruction should be no less than twice the diameter of the fan. The minimum distance of a fan to a wall or similar obstruction should be no less than 1.5 times the diameter of the fan.

Maximum Angle for Mount (feet)

Slope (in)	0	2/12	4/12	6/12	8/12	10/12
Roof Angle	0	9.5°	18.4°	26.6°	33.7°	39.8°
Diameter	Recommended Total Drop (Mount to Blade) Length					
6 feet	2	2	2	N/A*	N/A*	N/A*
8 feet	2	2	2	N/A*	N/A*	N/A*
10 feet	2	2	2	N/A*	N/A*	N/A*
12 feet	2	2	3	N/A*	N/A*	N/A*

*The Rapid Mount Commercial does not support this angle

The extension lengths above are minimum recommendations only, based solely on roof pitch and fan diameter. Other factors, such as allowing for proper airflow into the fan must be evaluated when determining extension requirements. In addition, MacroAir strongly recommends that the fan airfoils must be a minimum of 10 feet (3.05 meters) above the floor. Contact our technical department for assistance with fan placement and extension selection (technical support contact information can be found on page 49).

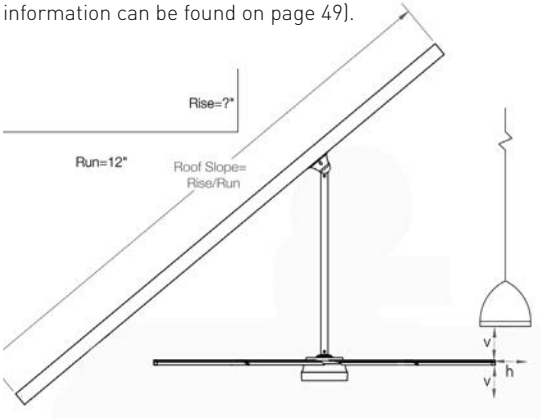

Minimum Clearance (Horizontal / Vertical inches):

Airfoil / Extension	1	2	3	4	5	6	7	8	9	10
6 feet	3 / 3	3 / 3	3 / 3	3 / 3	3 / 3	3 / 3	3 / 3	3 / 3	3 / 3	3 / 3
8 feet	3 / 3	3 / 3	3 / 3	3 / 3	3 / 3	3 / 3	3 / 3	3 / 3	3 / 3	3 / 4
10 feet	3 / 3	3 / 3	3 / 4	3 / 4	3 / 4	3 / 4	3 / 4	3 / 4	3 / 4	3 / 4
12 feet	3 / 4	3 / 4	3 / 4	3 / 4	3 / 4	3 / 4	3 / 5	3 / 5	3 / 5	3 / 5

The table above shows the clearance needed from the fan to obstructions such as lighting, conduit, etc.

Fan Dimensions

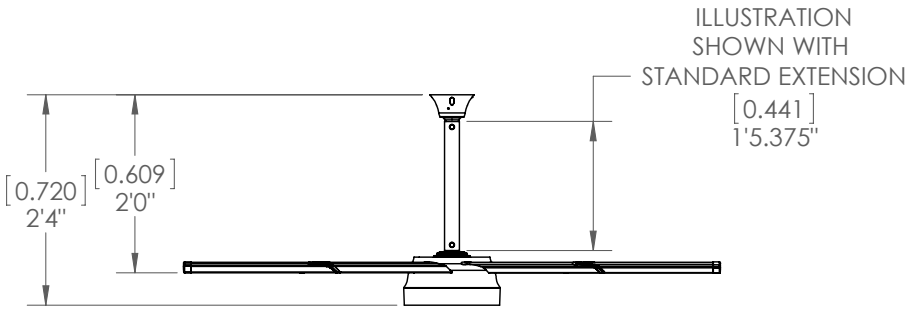

The Model 370 has a standard airfoil to mounting point clearance of 2 feet [0.61 m] with the Rapid Mount Industrial. Refer to the Fan Clearance & Placement chart on page 6 for allowable mounting options.

Fan Components and Tools

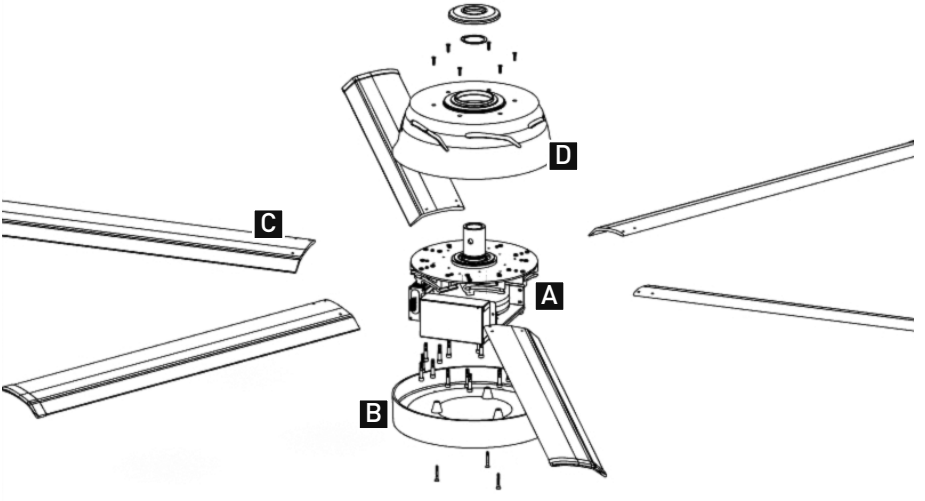

A - D-Drive Motor & Controller
B - Bottom Cover
C - XS Airfoil
D - Top Cover

Tools Required for Provided Hardware:

5/32'' Allen Wrench
1/8'' Allen Wrench (Mount Set Screw)
3/32'' Allen Wrench
5/16'' Allen Wrench
9/16'' Wrench
Phillips Screwdriver
3/8'' Socket
3/4'' Wrench
3/4'' Socket
Ratchet and Torque Wrenches

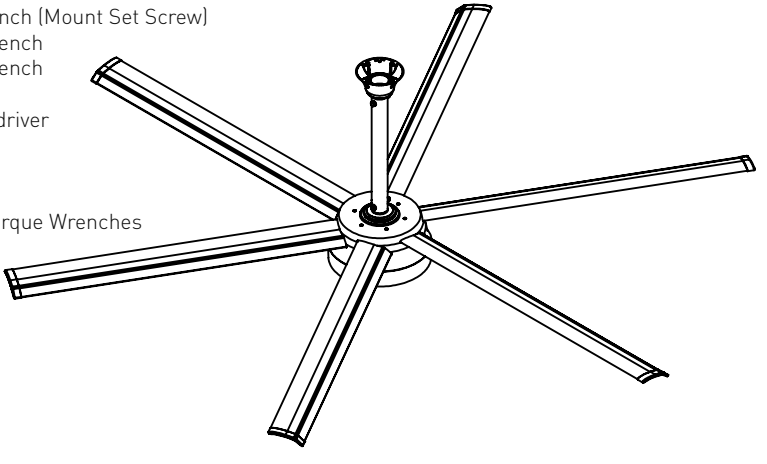

Step 1A - Rapid Mount Commercial Installation

Use Step 1A if you purchased a Rapid Mount Commercial. Use Step 1B if you purchased a Standard Mount. Choose the appropriate method for mounting the fan(s) based upon your specific application.

Rapid Mount Commercial

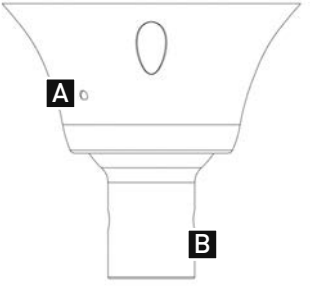

Guy wires are required for the Rapid Mount Commercial with drop lengths greater than 5 feet.

Components:

A - Locking Set Screws (2 locations on mount)
B - Extension Attachment Point
C - Break-outs for Power Wire, Remote Cable and Safety Cable

Note: For concrete installations (mounted directly to concrete), use provided 3/6" x 1-3/4" Climaseal Steel Hex-Washer-Head Concrete Anchors.

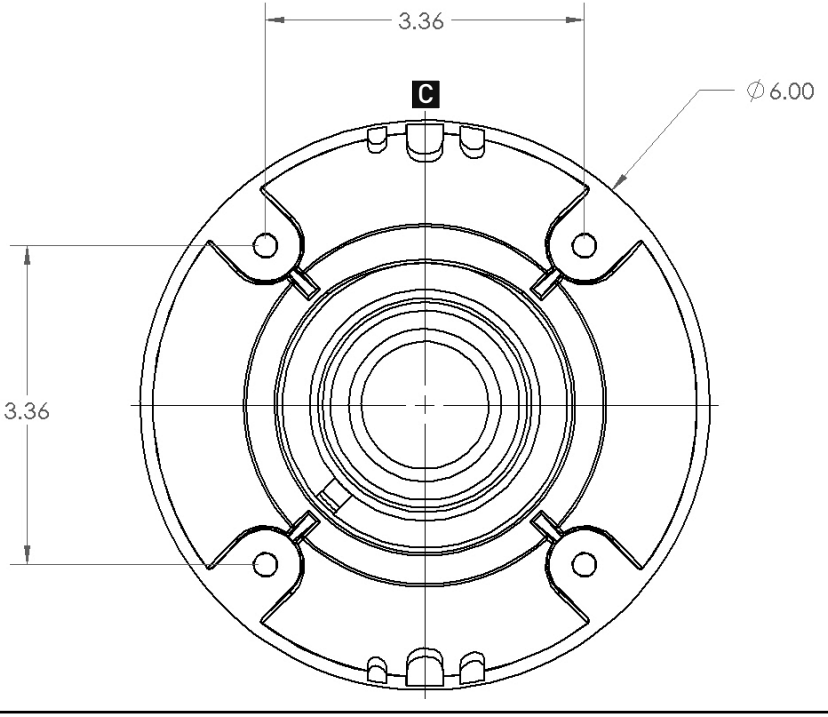

1.1A Unistrut Span Mounting

NOTE: Mounting to Z-purlins requires span mounting.

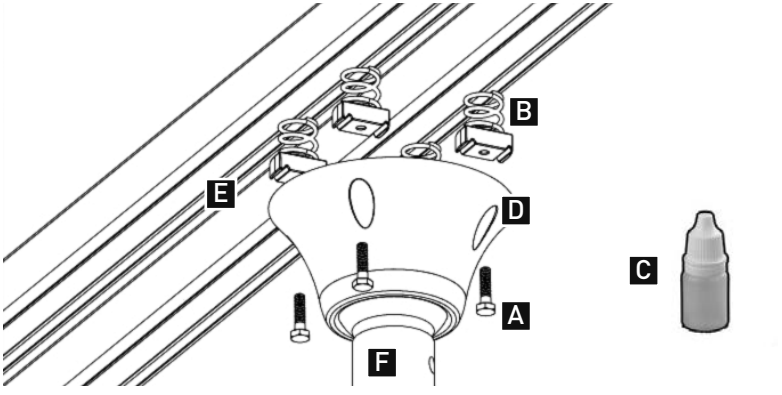

Components:

A - 1/4"-20 x 1" Grade 5 Bolts (4)
B - 1/4"-20 Unistrut Spring Nuts (P1006-1420) (4)
C - Liquid Thread Lock
D - Rapid Mount Commercial
E - 1-5/8" Unistrut Unpierced Channels (P1000 or P1001B) (2) (not included)
F - Extension Attachment Point

This method is used to span components of a building structure. The attachment point to the building structure can vary greatly and we recommend Unistrut be contacted so they may recommend the best method to attach the Unistrut to the building (www.unistrut.us). If the spanning distance is greater than 6 feet (P1000) or 10 feet (P1001B), please consult a Structural Engineer. Please refer to pg. 3 for a list of fan weights and torques.

1.1.1A: Cut two lengths of 1-5/8" Unistrut to the appropriate length. Span the two pieces of 1-5/8" Unistrut open side facing down and space apart so there is 5" from outside edge to outside edge (see illustration for example).

1.1.2A: Once the Unistrut is in place, apply liquid thread lock to the recommended bolts and use the remaining recommended hardware to attach the mount to the Unistrut. Torque the bolts to 6ft-lbs. Recommended torque is based on 1/4-20" hardware.

1.1.3A: Tighten the locking set screws on the mount once the extension attachment point is level. Refer to page 10 for illustration.

Final Results:

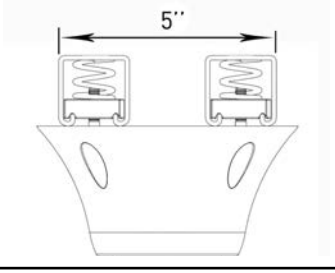

1.2A I-Beam Installation (1 of 2)

NOTE: Mounting to Z-purlins requires span mounting.

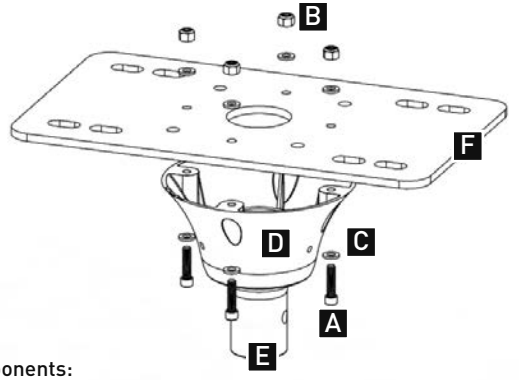

Components:

A - 1/4"-20 x 1" Socket Head Cap Screws (4)
B - 1/4"-20 Nylon Lock Nuts, Grade 5 (4)
C - M6 Washers (8)
D - Rapid Mount Commercial
E - Extension Attachment Point
F - Adapter Plate (for Glulam and I-Beam)

This method is used to install the Rapid Mount Commercial to an I-Beam.

1.2.1A: Attached the Rapid Mount Commercial to the adapter plate using the hardware specified above. Torque the screws to 6 ft-lbs.

1.2A I-Beam Installation (2 of 2)

Components:

A - 1/2"-13 Grade 5 Bolts (4)
B - 1/2" Flat Washers (8)
C - 1/2" Nylon Locking Nuts (4)
D - Rapid Mount Commercial
E - I-beam
F - Clamps and Shims

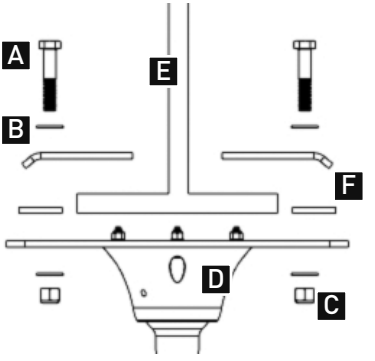

1.2.2A: Assemble the mount with one shim and clamp and hand tighten the hardware. Hook the clamp on one side of the I-beam or purlin and tighten hardware until the mount is snug but can still be moved.

1.2.3A: Assemble the other shim and clamp on the other side and center the mount under the I-beam or purlin. Ensure the clamps have maximum engagement on both sides and torque the hardware to 75 ft-lbs.

Final Results:

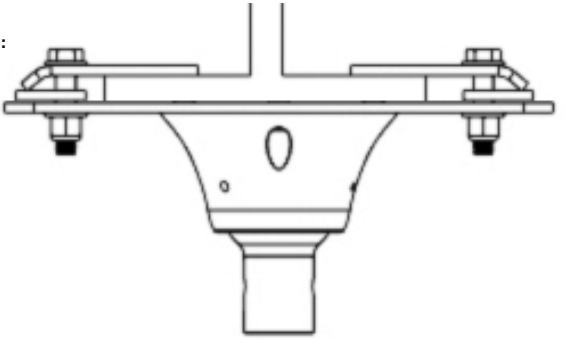

1.3A Glulam/Wood Beam Installation (1 of 2)

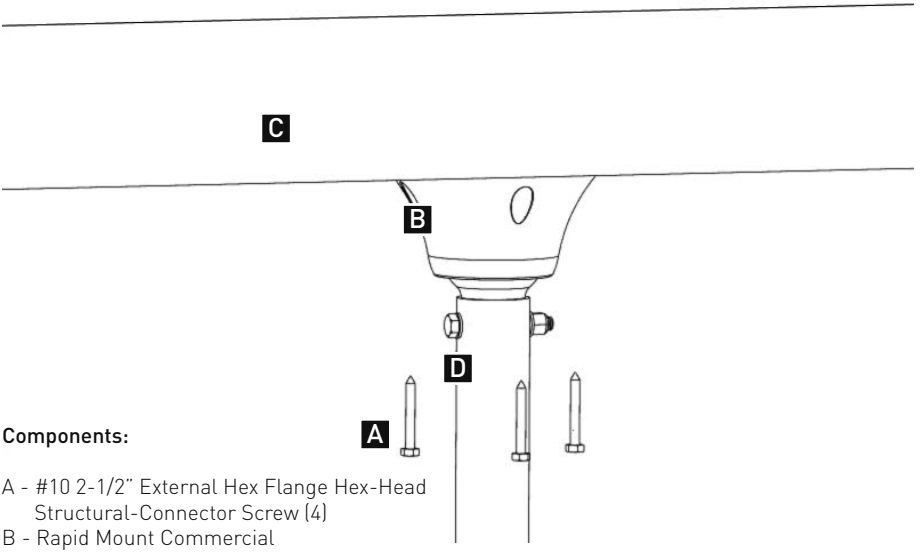

Components:

A - #10 2-1/2" External Hex Flange Hex-Head Structural-Connector Screw (4)
B - Rapid Mount Commercial
C - Glulam
D - Extension Attachment Point

This method is recommended for Glulams or wood beams 6" or wider. For narrower attachment points please refer to section 1.4A.

1.3.1A: Place the mount against the bottom of the beam and position the holes so that they are the furthest from the edge as possible. Keep in mind there are breakouts for wire and safety cable around the upper edge of the Rapid Mount Commercial. Determine where you want to route the power, remote, and safety cable and orientate the mount appropriately. It is ideal to route the safety cable on the opposite side of the power wire.

1.3.2A: Mark each hole location and use a 3/16" drill bit to drill a pilot hole for each lag. The pilot hole depth must be as deep or deeper than the length of the lag bolts. Once the pilot holes are drilled, remove the breakouts to be used for power, remote, and safety cable.

1.3A Glulam/Wood Beam Installation (2 of 2)

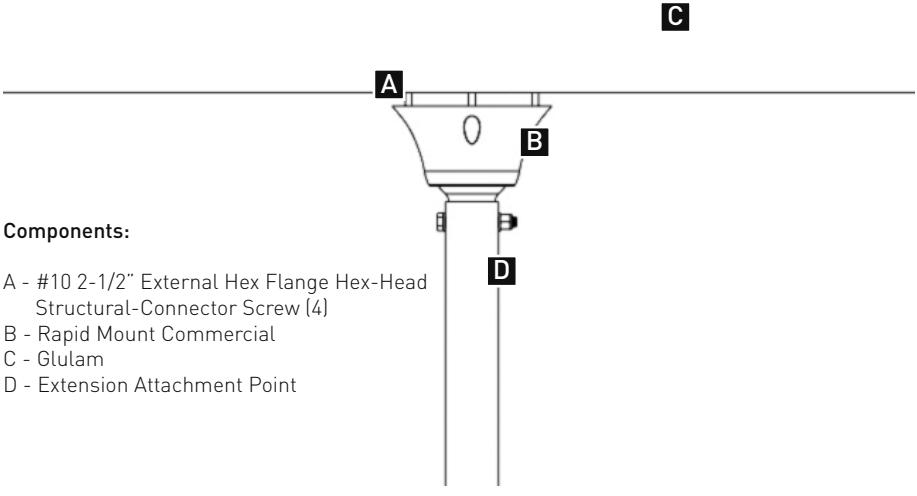

Components:

A - #10 2-1/2" External Hex Flange Hex-Head Structural-Connector Screw (4)
B - Rapid Mount Commercial
C - Glulam
D - Extension Attachment Point

1.3.3A: Place the mount against the bottom of the beam and drive the four lag bolts into the pilot holes but do not drive them all the way in as there needs to be roughly 1/2" of gap between the top of the mount and the bottom of the beam to run wire and cable.

1.3.4A: Once the power wire, remote cable, and safety cable have been routed and are sitting in their appropriate breakouts the lags can be tightened (refer to lag manufacturer for torque specs). While tightening the lags it is recommended that you observe all wires and cables to ensure they are not getting damaged between the mount and beam.

1.3.5A: Tighten the locking set screws on the mount once the extension attachment point is level. Refer to page 10 for illustration.

Final Results:

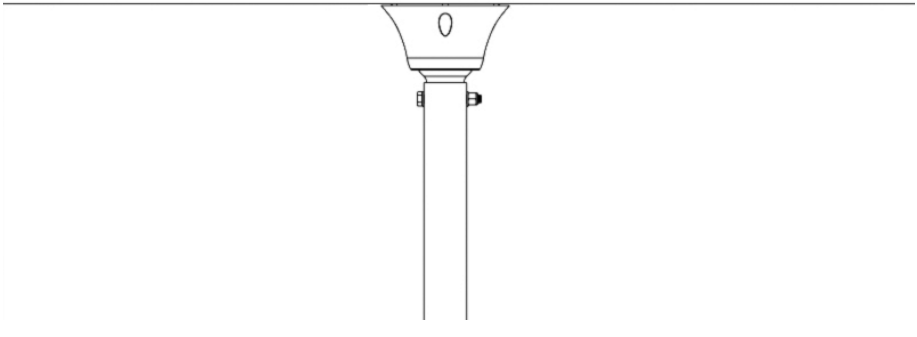

1.4A Glulam/Wood Beam Installation (1 of 3)

NOTE: Mounting to Z-purlins requires span mounting.

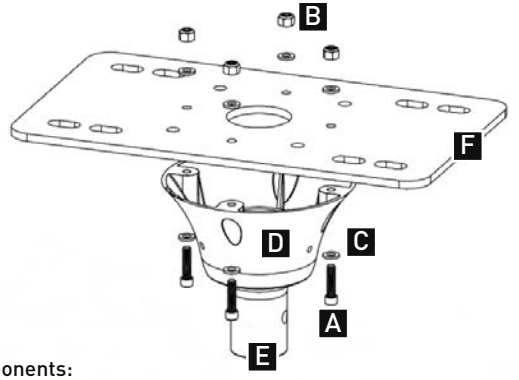

Components:

A - 1/4"-20 x 1" Socket Head Cap Screws (4)
B - 1/4"-20 Nylon Lock Nuts, Grade 5 (4)
C - M6 Washers (8)
D - Rapid Mount Commercial
E - Extension Attachment Point
F - Adapter Plate (for Glulam and I-Beam)

This method is recommended for Glulams or wood beams using the optional Glulam kit. For 6" or wider attachment points, the mounting method in 1.3A can also be used.

1.4.1A: Attached the Rapid Mount Commercial to the adapter plate using the hardware specified above. Torque the screws to 6 ft-lbs.

1.4A Glulam/Wood Beam Installation (2 of 3)

Components:

A - 1/2"-13 Grade 5 Bolts
(at least 2-1/2" longer than the beam is wide) (4)
B - 1/2" Flat Washers (8)
C - 1/2" Nylon Locking Nuts (4)
D - Glulam
E - Glulam Bracket

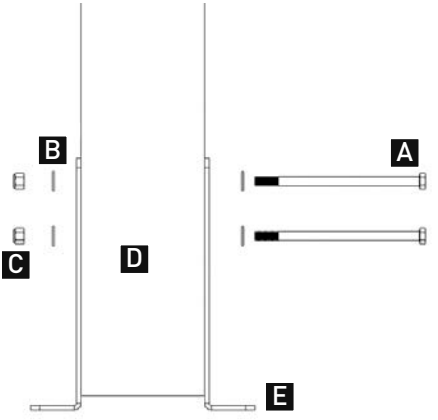

1.4.2A: Place a Glulam bracket against the beam and adjust the bracket so that it is slightly below the beam, enough to allow clearance for the Nylon Lock Nuts applied in step 1.4.1B. Trace the locations of four bolt holes and the two long sides of the Glulam bracket on the Glulam or wood beam.

1.4.3A: Once marked, flip the Glulam bracket over so the long side is against the bottom of the beam and line the short side up with the markings you previously made. Now mark the sides of the Glulam bracket along the bottom of the beam.

1.4.4A: Flip the Glulam bracket over to the other side of the beam and line the bottom of the bracket up with the marking along the bottom of the beam. Now mark the same four bolt hole locations and remove the bracket. Using a 1/2" wood bit drill out the four bolt holes from both sides.

1.4.5A: Install both brackets with the recommended hardware and hand tighten so the brackets are left loose.

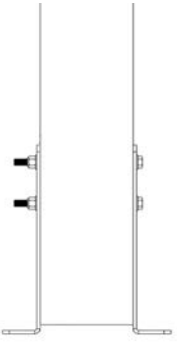

1.4A Glulam/Wood Beam Installation (3 of 3)

Components:

A - 1/2"-13 Grade 5 Bolts (4)
B - 1/2" Nylon Locking Nuts (4)
C - Glulam
D - Rapid Mount Commercial
E - Adapter Plate
F - Glulam Bracket

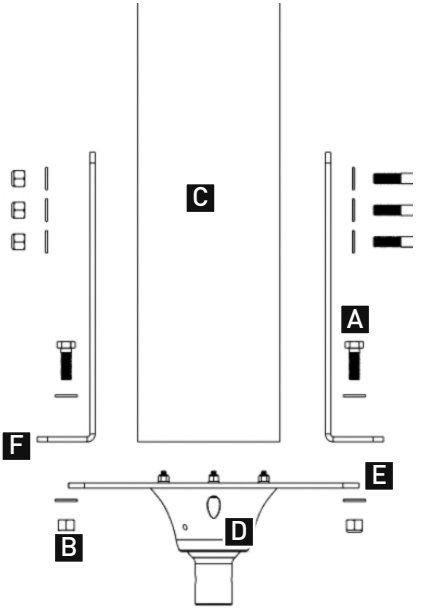

1.3.5B: Place the Rapid Mount Commercial and adapter plate against the bottom of the brackets and use the provided bolt kit to assemble loosely.

1.3.6B: Once the Rapid Mount Commercial and adapter plate are attached, tighten the Glulam brackets and ensure they are flush against the adapter plate.

Final Results:

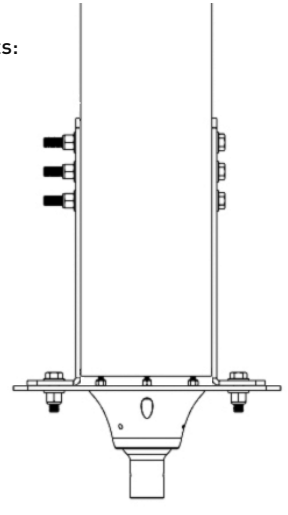

Step 1B - Standard Mount Installation

Use Step 1B if you purchased a Standard Mount. Use Step 1A if you purchased a Rapid Mount Commercial.

Choose the appropriate method for mounting the fan(s) based upon your specific application.

Standard Mount

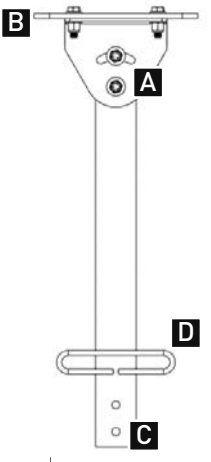

Guy wires are required for the Standard Mount with all drop lengths.

Components:

A - Locking Hardware
B - Top Plate
C - Motor Attachment Point
D - Guy Wire Attachment Point

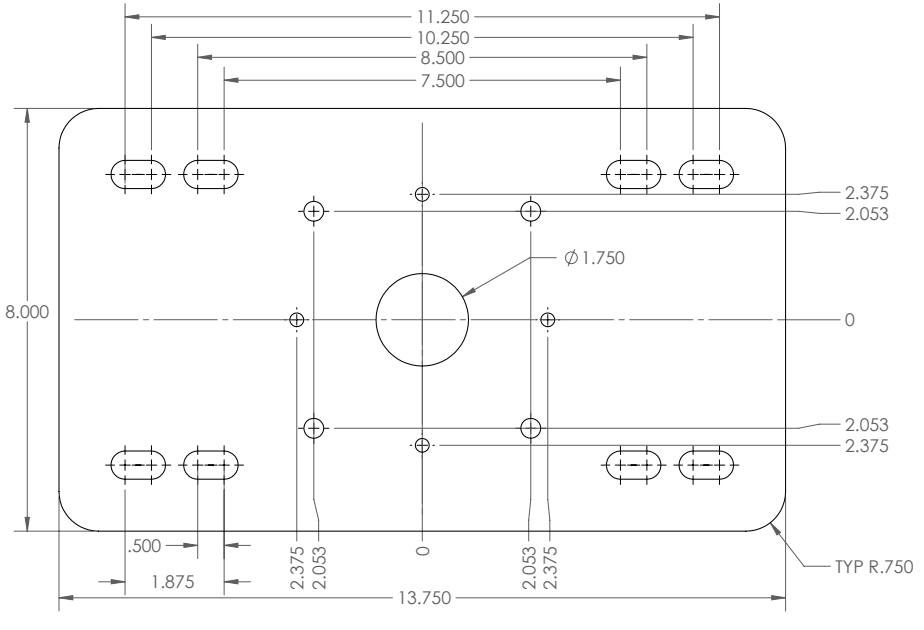

Standard Mount

Components:

A - Glulam Bracket (Optional)
B - I-beam Clamps (Standard)

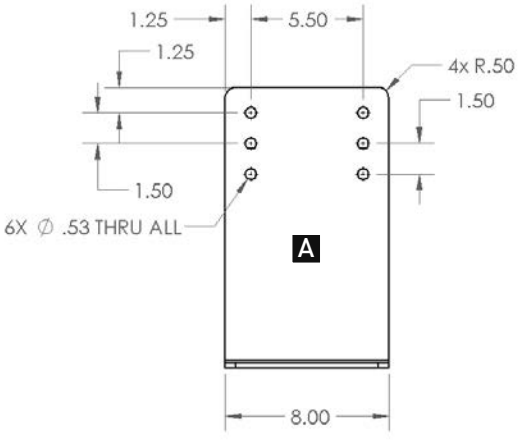

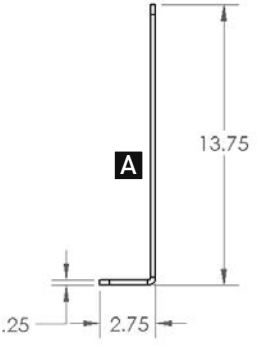

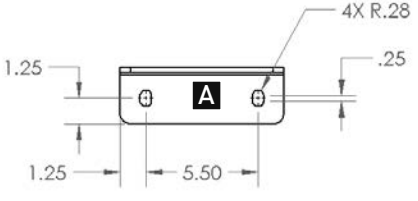

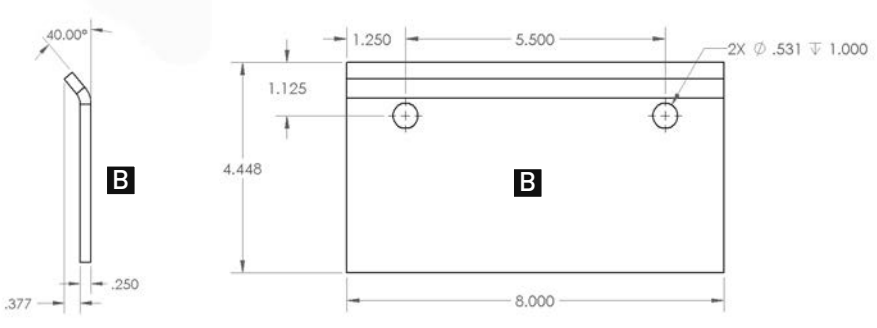

1.1B Unistrut Span Mounting

NOTE: Mounting to Z-purlins requires span mounting.

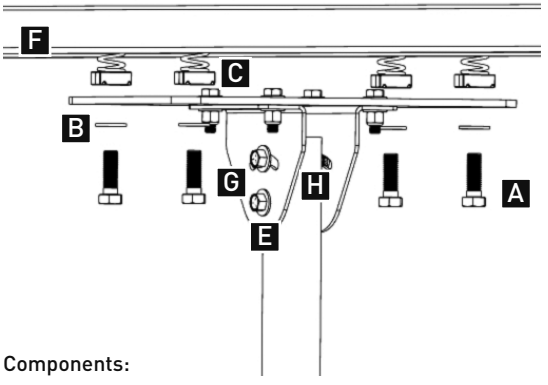

Components:

A - 1/2"-13 x 1" Grade 5 Bolts (4)
B - 1/2" Flat Washers
C - 1/2"-13 Unistrut Spring Nuts (P1010) (4)
D - Liquid Thread Lock
E - Standard Mount
F - 1-5/8" Unistrut Unpierced Channels (P1000 or P1001B) (2)
G - Locking Hardware
H - Extension Attachment Point

This method is used to span components of a building structure. The attachment point to the building structure can vary greatly and we recommend Unistrut be contacted so they may recommend the best method to attach the Unistrut to the building (www.unistrut.us). If the spanning distance is greater than 6 feet (P1000) or 10 feet (P1001B), please consult a Structural Engineer. Please refer to page 3 for the maximum torque and weight.

1.1.1B: Span two pieces of 1-5/8" Unistrut open side facing down and space apart so there is 12-7/8" from outside edge to outside edge (See illustration for example).

1.1.2B: Once the Unistrut is in place, apply liquid thread lock to the recommended bolts and use the remaining recommended hardware to attach the mount to the Unistrut. Torque the bolts to 50ft-lbs. Recommended torque is based on 1/2-13" hardware.

1.1.3B: Tighten the locking hardware on the standard mount to 30 ft-lbs once the extension attachment point is level.

Final Results:

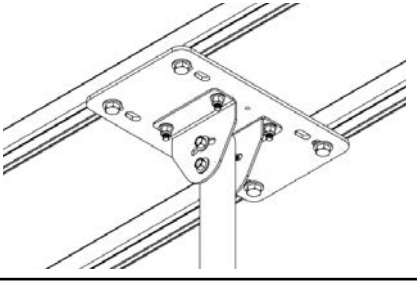

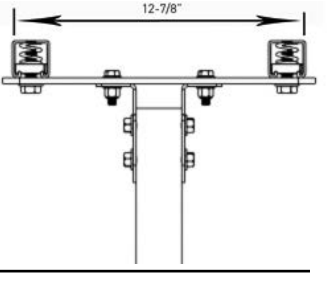

1.2B I-Beam Mounting

NOTE: Mounting to Z-purlins requires span mounting.

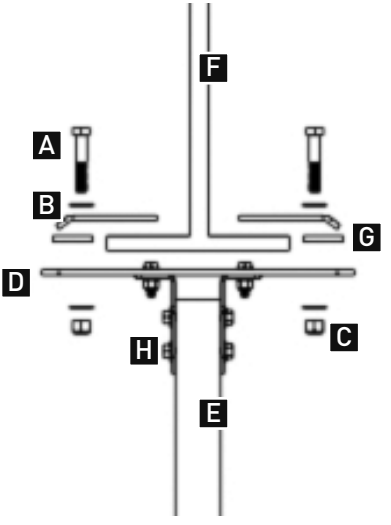

Components:

A - 1/2"-13 Grade 5 Bolts (4)
B - 1/2" Flat Washers (8)
C - 1/2" Nylon Locking Nuts (4)
D - Standard Mount
E - Extension Attachment Point
F - I-beam
G - Clamps and Shims
H - Locking Hardware

This method is used to install the Standard Mount to an I-beam.

1.2.1B: Assemble the mount with one shim and clamp and hand tighten the hardware. Hook the clamp on one side of the I-beam or purlin and tighten hardware until the mount is snug but can still be moved.

1.2.2B: Assemble the other shim and clamp on the other side and center the mount under the I-beam or purlin. Ensure the clamps have maximum engagement on both sides and torque the hardware to 75 ft-lbs.

1.2.3B: Tighten the locking hardware (H) on the mount to 30 ft-lbs once the fan is level.

Final Results:

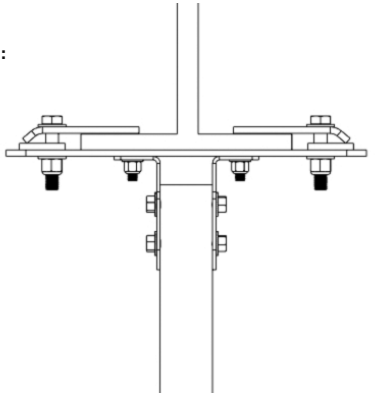

1.3B Glulam/Wood Beam Mounting (1 of 2)

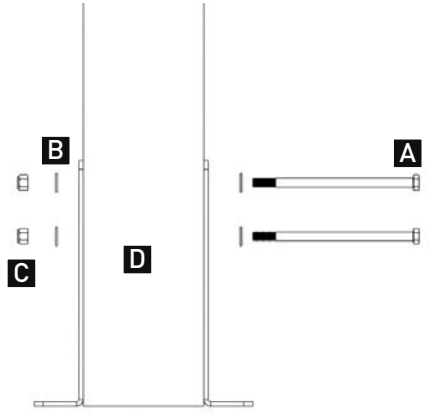

Components:

A - 1/2"-13 Grade 5 Bolts (at least 2-1/2" longer than the beam is wide) (4)
B - 1/2" Flat Washers (8)
C - 1/2" Nylon Locking Nuts (4)
D - Glulam

This method is recommended for Glulams or wood beams 5-1/8" or wider. For narrower attachment points please refer to the Unistrut mounting method to span across two or more beams to increase the structural integrity.

1.3.1B: Place a Glulam bracket against the beam and use a level or straight edge to line the bottom of the bracket up against the bottom of the beam. Trace the locations of four bolt holes and the two long sides of the Glulam bracket on the Glulam or wood beam.

1.3.2B: Once marked, flip the Glulam bracket over so the long side is against the bottom of the beam and line the short side up with the markings you previously made. Now mark the sides of the Glulam bracket along the bottom of the beam.

1.3.3B: Flip the Glulam bracket over to the other side of the beam and line the bottom of the bracket up with the marking along the bottom of the beam. Now mark the same four bolt hole locations and remove the bracket. Using a 1/2" wood bit drill out the four bolt holes from both sides.

1.3.4B: Install both brackets with the recommended hardware and hand tighten so the brackets are left moveable.

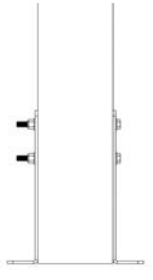

1.3B Glulam/Wood Beam Mounting (2 of 2)

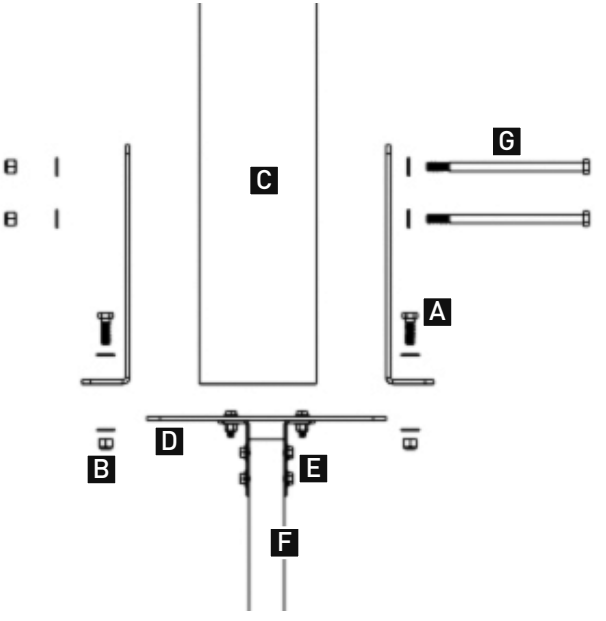

Components:

A - 1/2"-13 Grade 5 Bolts (4)
B - 1/2" Nylon Locking Nuts (4)
C - Glulam
D - Standard Mount
E - Locking Hardware
F - Extension Attachment Point
G - 1/2"-13 Grade 5 Bolts (at least 2-1/2" longer than the beam is wide) (4)

1.3.5B: Place the Standard Mount against the bottom of the brackets and use the provided bolt kit to assemble loosely.

1.3.6B: Once the Standard Mount is attached, tighten the Glulam brackets and ensure they are flush against the beam from top to bottom.

1.3.5B: Tighten the locking hardware on the mount to 30 ft-lbs once the fan is level.

Final Results:

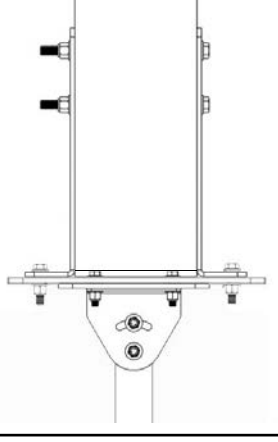

Step 2A - Extension and Motor Unit Installation for Rapid Mount Commercial

Attach the extension to the bottom of the mount and the motor to the bottom of the extension.

2.1A Extension & Motor Unit Installation

Components:

A - 3/8"-16 x 3" Grade 5 (or higher) Bolts (2)
B - 3/8" Flat Washer (4)
C - 3/8"-16 Nylon Locking Nuts (2)
D - Rapid Mount Commercial
E - Extension
F - Motor Unit

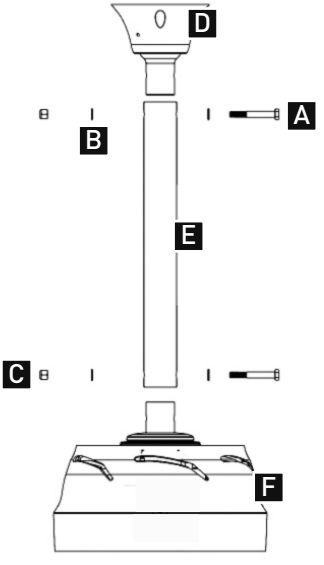

2.1.1A: The image above illustrates the proper assembly of the motor unit, extension, and mount. The provided hardware can be installed and hand tightened until the fan is installed and the power wire, safety cable, and remote cable are installed. Once completed, torque the bolts to 30 ft-lbs.

DO NOT RUN THE FANS WITHOUT AIRFOILS. THE FAN IS NOT CONFIGURED TO OPERATE WITHOUT AIRFOILS ATTACHED.

Final Results:

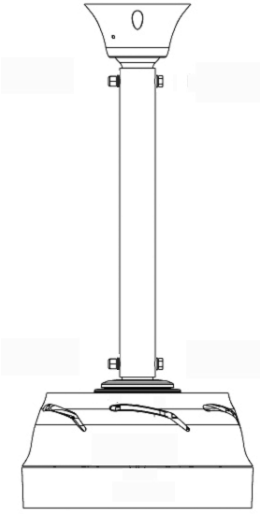

Step 2B - Extension and Motor Unit Installation for Standard Mount

Attach the extension to the bottom of the mount and the motor to the bottom of the extension.

2.1B Extension and Motor Unit Installation

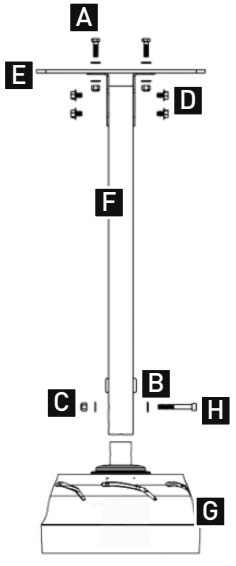

Components:

A - 3/8"-16 x 1-1/4" Bolts (4)
B - 3/8" Flat Washers (10)
C - 3/8"-16 Nylon Locking Nuts (4)
D - 3/8"-16 x 1/2" Serrated Flange Head Bolts (4)
E - Standard Mount
F - Extension
G - D-Drive Motor Unit
H - 3/8"-16 x 3" Grade 5 (or higher) Bolt (1)

2.1.1B: Using the provided hardware, attach the extension to the mount and then, attach the motor to the extension. It is recommended that only two of the four bolts are installed at this time, one for the mount to extension side and one for the motor to extension side. This is in order to more easily install the wiring. Do not torque them until the wiring and safety cable are installed. It may be necessary to partially remove the bolts to get the wiring past. Once the wiring and safety cable are installed, torque all four bolts to 30 ft-lbs.

DO NOT RUN THE FANS WITHOUT AIRFOILS. THE FAN IS NOT CONFIGURED TO OPERATE WITHOUT AIRFOILS ATTACHED.

Final Results:

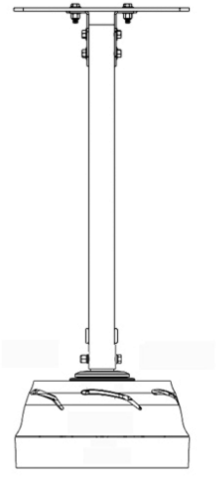

Step 3 - Safety Cable and Electrical Installation

Install the Safety cable and insert the wires into the appropriate terminals on the controller.

3.1 Touchpad Remote Mounting

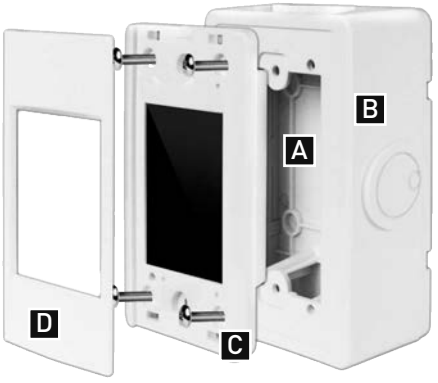

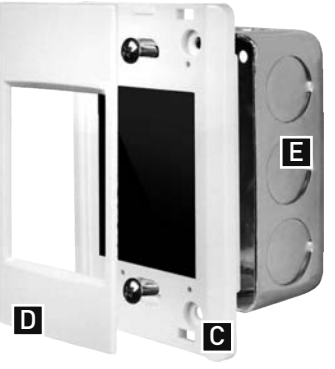

Components:

A - Base Plate
B - Front of Enclosure
C - Touch Screen
D - Bezel
E - Single Gang Electrical Box (not provided)

3.1A Wall Mounting (Provided)

3.1.1A: Mount the base plate of the enclosure to the wall using the 4 provided wall anchors and screws.

3.1.2A: Snap the front of the enclosure to the base plate.

3.1.3A: Plug in the pre-wired shielded CAT5e cable from the screen into the RJ45 coupler inside the enclosure.

3.1.4A: Secure the touch screen to the enclosure using the 4 provided screws.

3.1.5A: Lock the provided bezel into place via the plastic tabs.

3.1.6A: Plug the provided shielded CAT5e cable from the fan into the RJ45 on the outside of the enclosure.

3.1B Flush Mounting (Not Provided)

3.1.1B: Install the single gang electrical box (not provided).

3.1.2B: Run the provided shielded CAT5e cable from the fan into the single gang electrical box.

3.1.3B: Plug the remote cable into the pre-wired shielded CAT5e cable from the screen using the provided RJ45 coupler.

3.1.4B: Secure the touch screen to the enclosure using the 2 provided screws.

3.1.5B: Lock the provided bezel into place via the plastic tabs.

Note: The Touchpad Remote will automatically turn off after 30 seconds of inactivity. To turn the screen back on, simply touch anywhere on the screen.

Note: Shielded CAT5e cable is provided standard. Up to 400 feet of cable can be ordered and 400 feet is the maximum distance allowed.

Refer to the next page for dimensions.

3.1 Touchpad Remote Drawings

Remote Enclosure

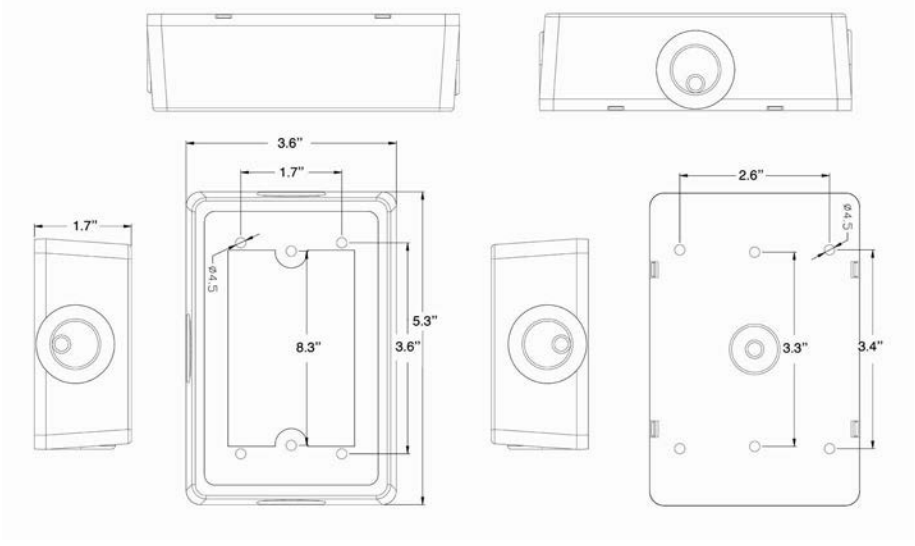

Remote LCD Display

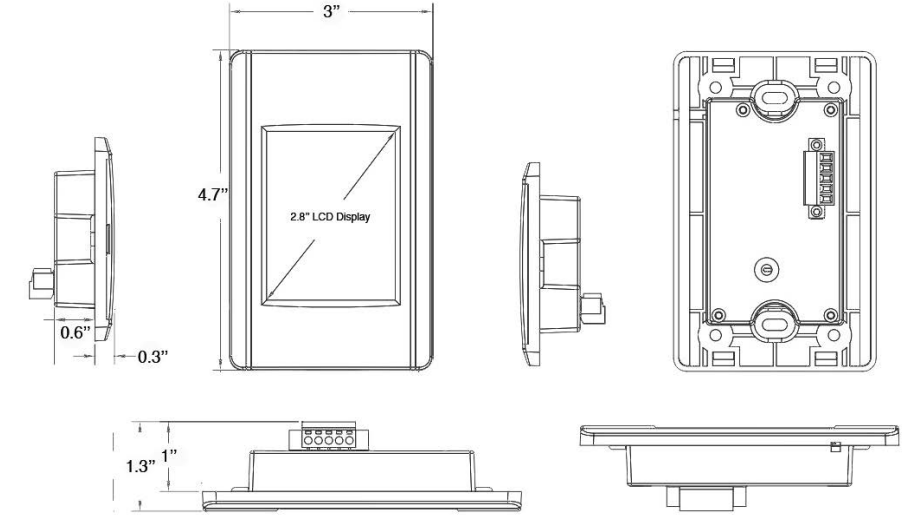

3.2 Safety Cable & Electrical Installation

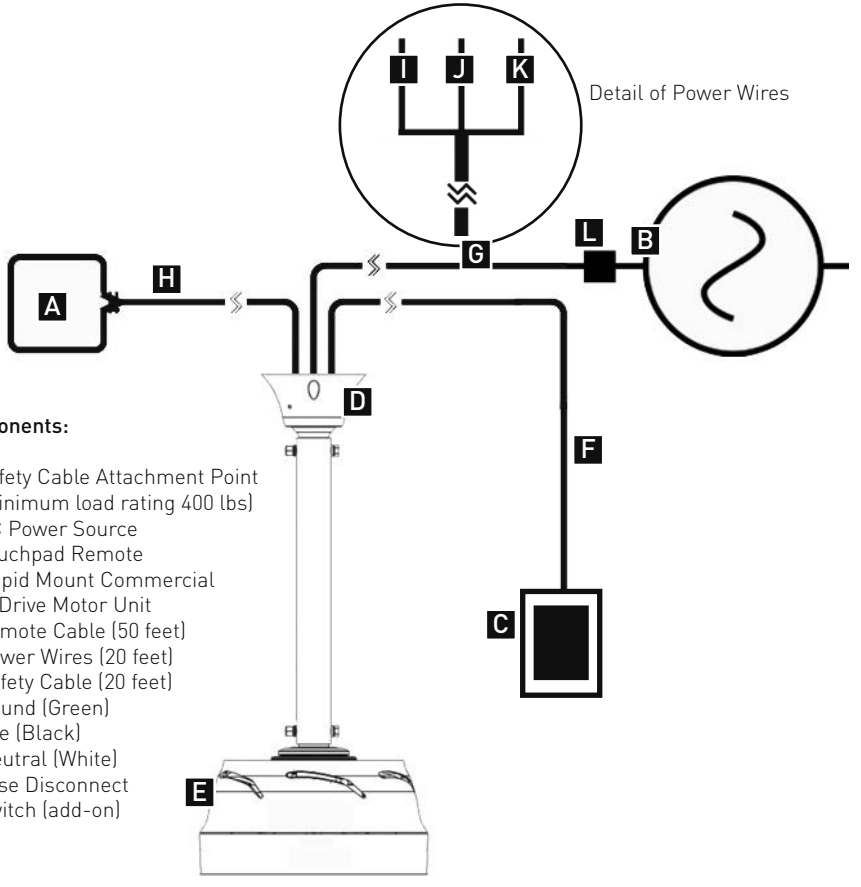

Components:

A - Safety Cable Attachment Point (Minimum load rating 400 lbs)
B - AC Power Source
C - Touchpad Remote
D - Rapid Mount Commercial
E - D-Drive Motor Unit
F - Remote Cable (50 feet)
G - Power Wires (20 feet)
H - Safety Cable (20 feet)
I - Ground (Green)
J - Live (Black)
K - Neutral (White)
L - Fuse Disconnect Switch (add-on)

3.2.1: Route the safety cable, remote cable and power wires through the extension and the mount.

3.2.2A: For Glulam or wood beam installation, drill a 5/16'' hole through the beam above the center line and route the safety cable in a loop and attach the cable to itself with the provided cable clamps. Make sure that there is little to no slack in the safety cable. Avoid sharp edges.

3.2.2B: For I-beam installation, beam clamps can be used with eye bolts. Attach the beam clamps on both sides of the beam and route the safety cable through the eye bolts. Attach the cable to itself using the provided cable clamps and make sure that there is no slack. Avoid sharp edges.

3.2.3: Run the remote cable to the remote location. The cable can be run in conduit or open if desired as the cable is low voltage and shielded. To attach to the touchpad remote, simply plug the end of the remote cable into the RJ45 jack on the touchpad remote.

3.2.4: Connect to power in compliance with local and state codes. This device may require a disconnect that is outside of the swept area of the blades to comply with OSHA (not provided). **Refer to the above illustration for the Final Results.**

3.3 Fuse Disconnect Switch Drawings

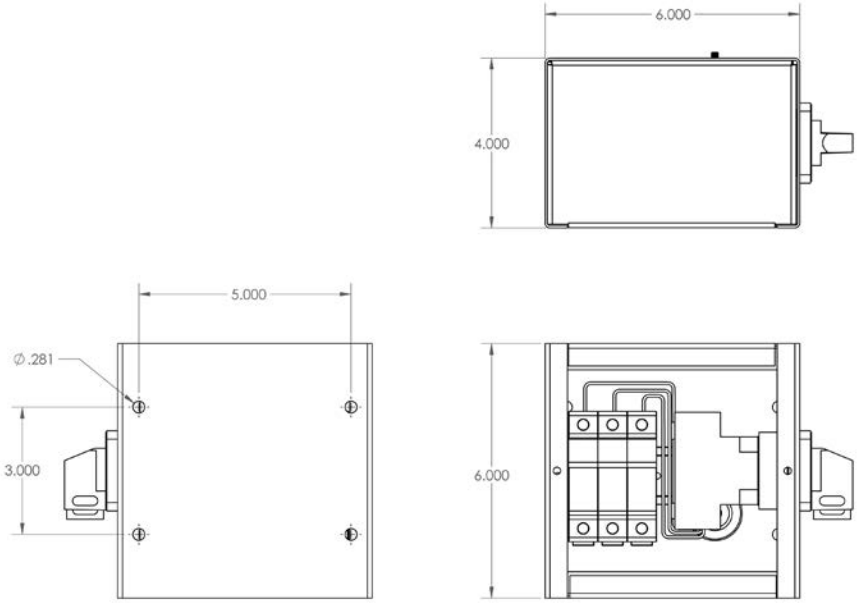

3.3 Fuse Disconnect Switch Installation

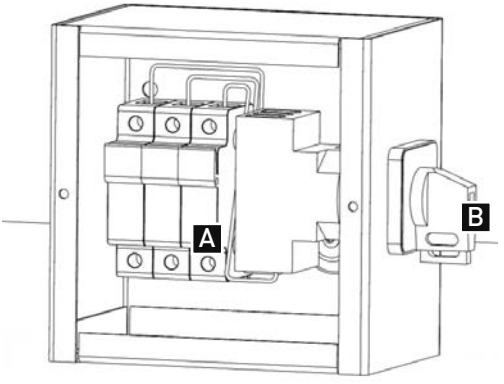

Components:

A - Fuse Block
B - Disconnect Switch

NOTE: Ensure that there is no power when installing this component.

The fuse disconnect switch is an optional component offered by MacroAir. Reference page 4 for fuse size based upon the incoming power and fan diameter.

3.3.1: Mount the fuse disconnect switch outside of the swept area of the fan airfoils.

3.3.2: Wire the power cable from the fan to the bottom of the fuse block. Then, wire the incoming power source to the disconnect switch.

3.3.3: In the diagram below, a three phase system is shown. For a single phase system, phase 1 would be connected to L1, neutral would be connected to L2, and L3 would be left not terminated.

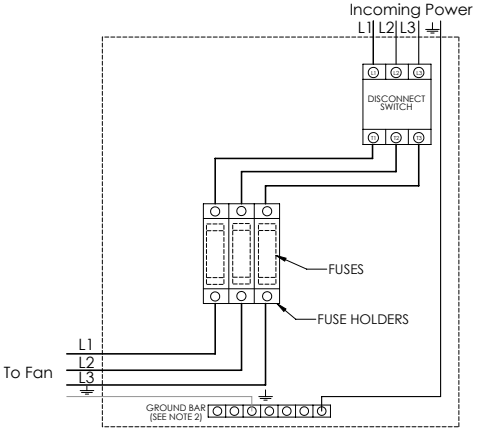

3.4 Emergency Disconnect Schematic

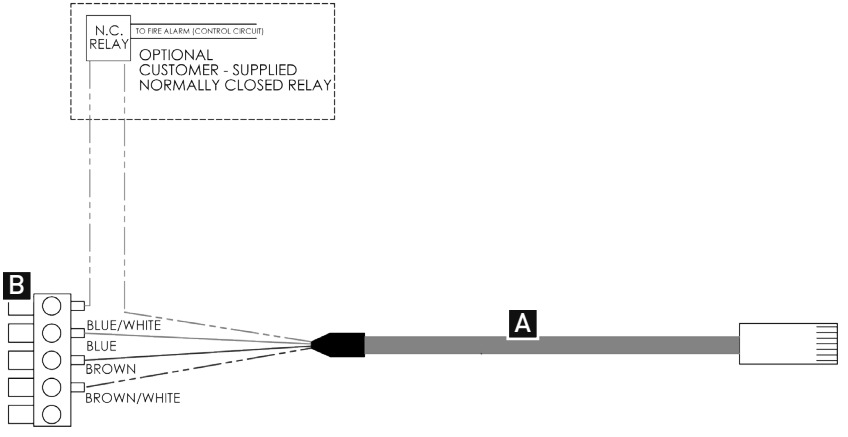

Components:

A - Remote Harness (found in single fan remote enclosure)
B - Terminal Block Connector

3.4.1: Use the schematic above to connect the fan(s) to an emergency stop (i.e. fire alarm system).

Step 4 - Guy Wire Installation

Install the Guy wires and Guy wire cord.

4.1 Guy Wire Installation (1 of 2)

Guy wires are required for the Standard Mount with all drop lengths and are required for the Rapid Mount Commercial with drop lengths greater than 5 feet.

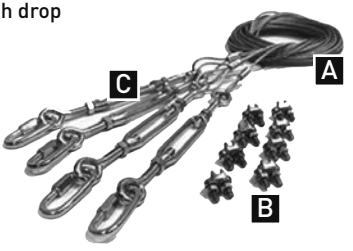

Components:

A - Guy Wires
B - Cable Clamps
C - Turnbuckles
D - Guy Wire Attachment Points (2)

4.1.1: Attach the turnbuckle end of the Guy wires to the Guy wire loops located on the Guy wire brackets with the provided quick links.

4.1.2: When laying out the locations of the Guy wire mounting points, attempt to maintain a 45 degree angle between the ceiling and the Guy wires (as illustrated in the drawing below).

4.1.3: Avoid any sharp edges that may contact the Guy wire. Guy wires need to be attached to the building structure via 1/2" eye lags or bolts with the provided cable clamps.

NOTE: Do not wrap the Guy wires around the building structure.

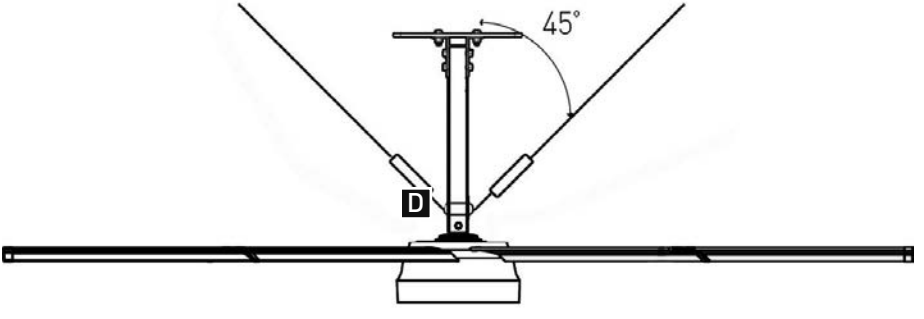

4.1 Guy Wire Installation (2 of 2)

Components:

A - Guy Wires
B - Cable Clamps
C - Turnbuckles
D - Guy Wire Attachment Points (2)

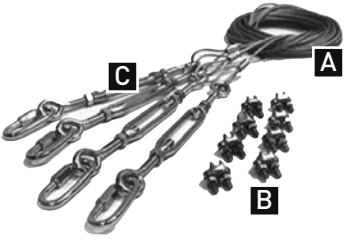

4.1.4: With the aid of a level placed against the extension, tighten the turnbuckles by hand in a crisscross pattern while periodically checking to ensure that the fan is level.

4.1.5: Tighten the turnbuckles until the fan unit is stable in the level position. Make sure to **not overtighten** the turnbuckles.

4.1.6: Once all of the Guy wires are snug and the fan unit is stable and level, tighten the jam nuts on the turnbuckles.

NOTE: Do not use tools to tighten the turnbuckles; only use tools to tighten the jam nuts.

Final Results:

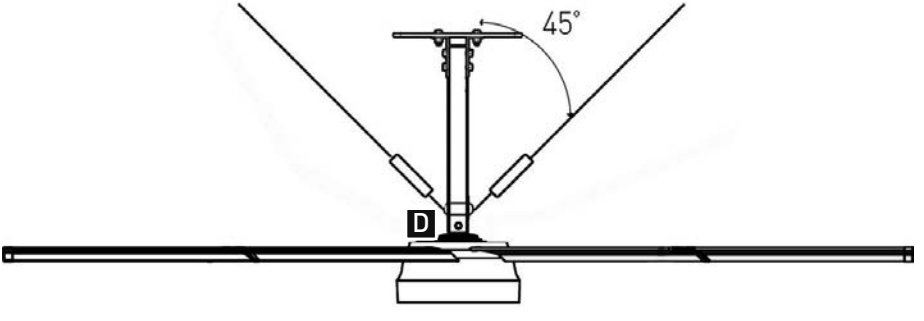

4.2 Guy Wire Cord Installation

Components:

A - Guy Wire Cord
B - Eyelets
C - Cord Lock

4.2.1: Insert the elastic cord through the top eyelet of each of the 4 turnbuckles as shown in pictures 1 & 2.

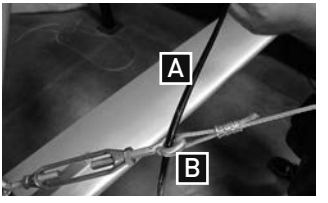

Picture 1

Picture 2

4.2.2: Pull one of the ends of the cord through one of the holes on the cord lock and then pull the end into the groove to lock it. Use pliers to properly secure the cord in the groove of the cord lock as shown in pictures 3 & 4.

4.2.3: Repeat step 4.2.2 for the second end of the cord using the opposite hole and groove on the cord lock.

4.2.4: The safety cord should be pulled tight and fastened as shown in picture 5.

Picture 3

NOTE: The Guy wire cord is a redundant safety system for our fans. The Guy Wire Cord Kit applies to our fans with turnbuckles installed on the Guy wires. The turnbuckles may have been supplied by the installer or factory supplied by MacroAir. This system utilizes a polymer cord to secure the ends of the turnbuckles. In the event that one or more comes loose due to stresses that exceed their capacity, the turnbuckles would be captive above the airfoils and prevent additional damages and down time to your fan.

Picture 4

Picture 5

THE CORD IS CUT TO A PREDETERMINED LENGTH FOR PROPER TENSION. DO NOT EXCESSIVELY STRETCH THE CORD.

Step 5 - Airfoil Installation

Remove the bottom cover, install the airfoils to the airfoil clamps and re-attach the bottom cover.

5.1 Airfoil Installation (1 of 3)

Components:

A - #8-32 x 1-1/4'' Bolts
B - Bottom Cover
C - Airfoil Clamps
D - Remote Cable
E - Power Wires

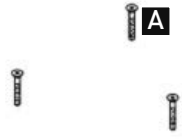

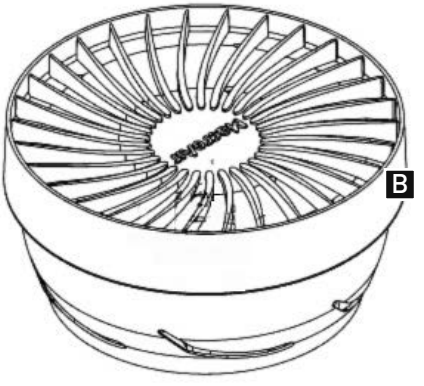

5.1.1: Remove the three allen bolts that secure the bottom cover and remove the bottom cover to expose the bottom of the airfoil clamps and the wiring.

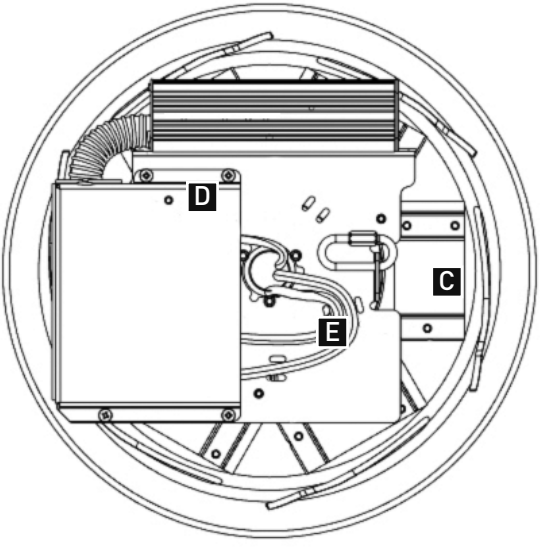

5.1 Airfoil Installation (2 of 3)

Components:

A - #10-24 x 1-1/2'' Bolts
B - Airfoil
C - Airfoil Clamps

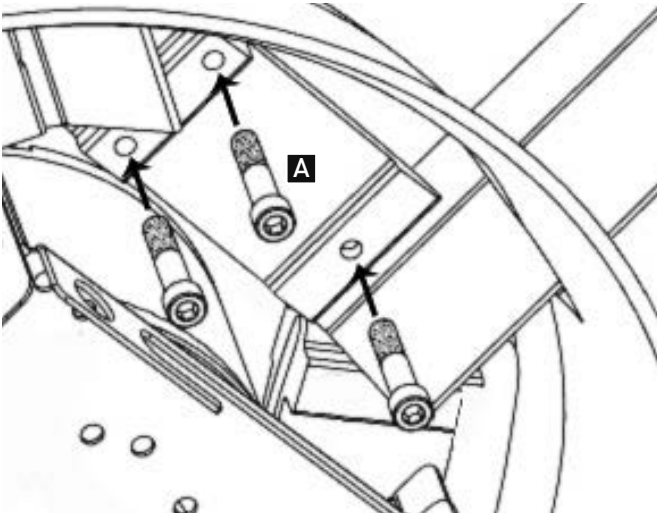

5.1.2: Insert an airfoil into one of the airfoil clamps and line up the three bolt holes. Insert an airfoil bolt into the airfoil clamp and hand tighten until snug. Repeat the last step until all three airfoil bolts are installed snugly. If the bolts seem like they will not tighten chances are they are not seated in the airfoil clamp properly. Try moving the airfoil up and down and side to side with slight movements while applying upward pressure to the bolt. The bolt should seat further into the airfoil clamp. Once all bolts are seated and snug, torque them to 75 in-lbs.

5.1.3: Repeat step 4.1.2 for all 6 blades.

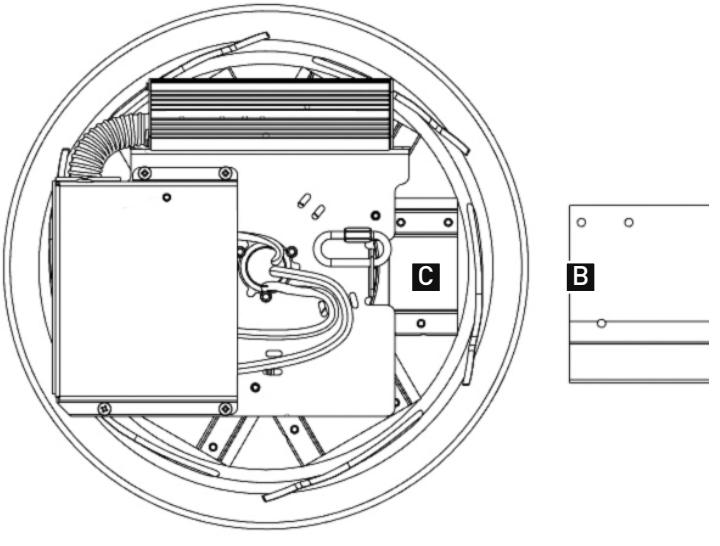

5.1 Airfoil Installation (3 of 3)

Components:

A - #8-32 x 1-1/4'' Bolts
B - Bottom Cover

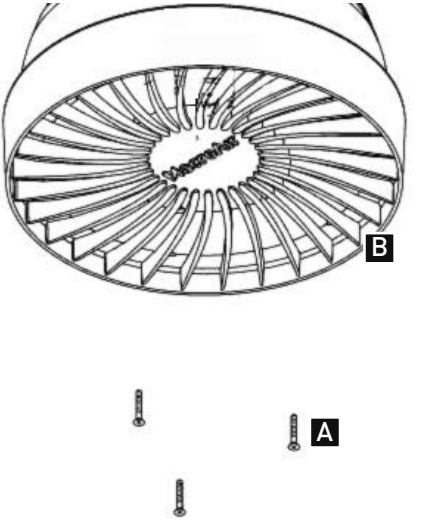

5.1.4: Re-install the bottom cover using the provided allen bolts and torque bolts snugly.

Final Results:

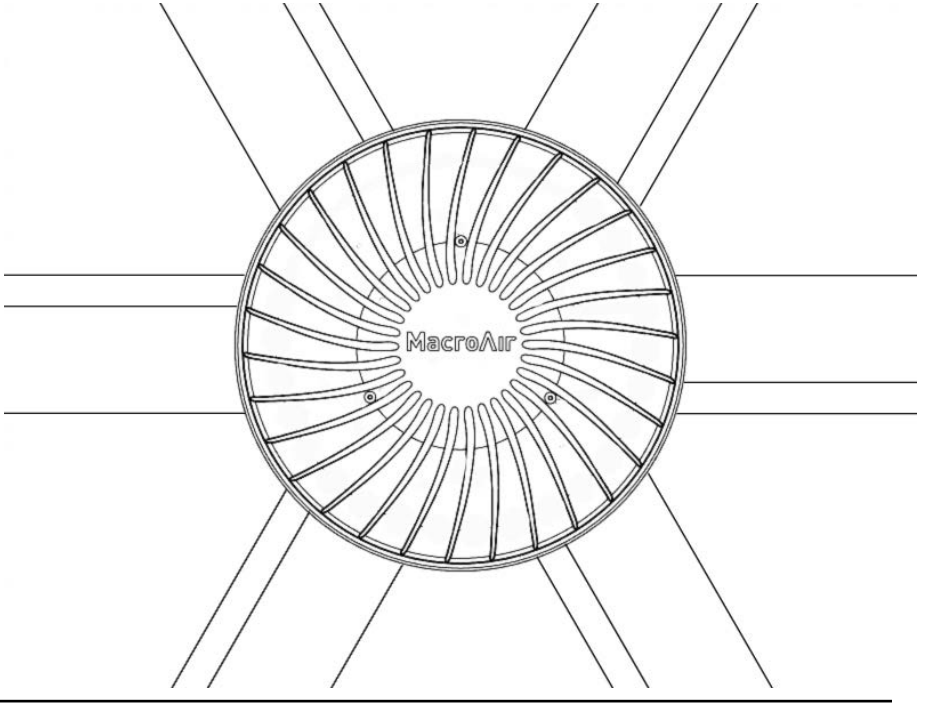

Step 6 - Touchpad Remote Navigation and Operation

Choose one of the two methods to mount the touchpad remote and configure the fan diameter for initial operation.

6.1 Touchpad Remote Navigation

Buttons:

A - Forward / Reverse: Alternate between forward and reverse operation
B - Power Button: Turn the screen off
C - Speed Up / Speed Down: Increase or decrease the speed of the fan
D - Speed Box: Real-time indication of fan speed
E - Navigation: Navigate to the next screen
F - Fan Diameter Selection: Hidden button to navigate back to the fan diameter selection screen

6.2 Touchpad Remote Operation

Screens:

A - Home Screen
B - Fault Code Screen
C - Operating Hours Screen
D - Fan Diameter Selection Screen

Instructions:

6.2.1: Once the fan is powered on, click the forward button and increase the speed by clicking the up button. The fan will do an initial blade detection: spinning in reverse to 10 RPM, accelerating for a few seconds, and then the fan will have recognized the fan diameter. It will then slow down and resume the commanded direction and speed (this operation will occur every time that the incoming power to the fan is cycled).

6.2.2: If the fan stops operating unexpectedly, navigate to the fault code screen and record any fault codes (if present). Click the reset button until the display reads '0'. Then, attempt to run the fan again. If the fan is still not operating, navigate to the fault code screen via the navigation arrows at the bottom of the screen and document the code(s) displayed and call technical support at 866-668-3247.

6.2.3: To view your fan's operating hours, navigate from the home screen to the far right screen.

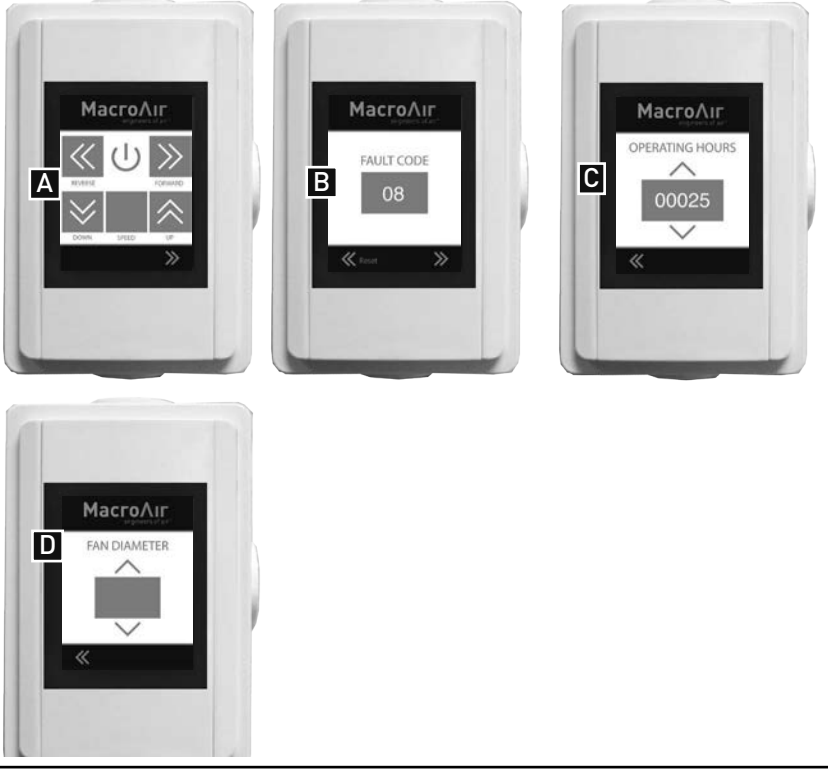

Maintenance Information

Guy Wire Check (if applicable): Checking a MacroAir fan's Guy wires for tension and inspecting for frayed sections could mitigate a problem before it occurs. Fan owners should confirm that the Guy wires are not wrapped around any sharp edges. MacroAir recommends attaching Guy wires to the building with eye bolts or eye lags. If they are not already installed with eye bolts or lags, we urge fan owners to install these in order to help keep the Guy wires from fraying. If Guy wires are installed with turnbuckles, jam nuts should periodically be checked to ensure tightness. If they are loose, the Guy wire cables may need to be re-tensioned.

Airfoil Cleaning: Depending on the type of commercial application the MacroAir fan is in, there can be quite a bit of dust or other particulates (including grease!) that cling to the fan's airfoils. While this may not affect fan performance, we recommend fan owners keep airfoils clean by having a maintenance person or skilled trade professional – who has experience using a lift – wipe the fan airfoils with a rag or sponge using hot water or regular cleaning solutions. Please do not use chlorine or any chemicals containing chlorine.

Safety Cable Check: Each MacroAir fan comes with a safety cable. Depending on the fan model, the safety cable either wraps around the building structure and the fan frame, or comes out of the top of the fan and wraps around the building structure. The safety cable is an important part of the safety system and acts as a last resort should an earthquake, collision, or similar catastrophic event occur. As such, it's vital for fan owners to ensure that it is intact and properly secured.

Reverse Operation: The beauty of MacroAir HVLS fans is that they are built to run in forward and reverse mode. However, changing the direction of your fan can put initial stress on the fan if it has not been properly checked. It is a good idea to make sure Guy wires, safety cables and all bolts and nuts are tight. Cleaning the fan before switching directions will prevent dust and other particles from falling off the fan airfoils that are now turning in the opposite direction.

Maintenance Plan:

Things to look for include: rust, cracked welds, unusual noise, hub migration/ movement, guy wire loosening or movement.

Years 1-5:
One inspection on lift in first year and one from the ground per year after one full year of service.

Years 6-10:
One inspection on lift per year.

Year 11 and beyond:
Annual inspections from a lift and seasonal inspections both before and after the busy season from the ground.

NOTE: If there are issues or concern discovered during an inspection, please contact the service and technical support department at MacroAir for help.

Warranty and Technical Support

To register the installed fans for the 50,000 hour warranty, go to macroairfans.com/register.

What does the 50,000 hour warranty cover?

This warranty covers any part or component of the AirVolution-D shipped by MacroAir that is found to contain a manufacturing defect. MacroAir will repair or replace such part, component, or the entire fan free of charge.

How Long Does the Coverage Last?

This warranty covers the entire AirVolution-D fan and all its component parts for 50,000 hours of running time.

Do I Need to Pay Shipping, Removal and Re-Installation Costs?

You do NOT need to pay shipping, removal and installation costs if your AirVolution-D needs to be repaired or replaced due to a manufacturing defect within three years of the original purchase, and you will be reimbursed for those costs, upon approval of such costs by MacroAir. After three years, this warranty is still in full effect for the remainder of the 50,000 hours, but it just does not cover your cost to ship the fan to MacroAir, or removal or re-installation of the fan.

What is NOT covered under this warranty?

This warranty will not cover repairs or replacements caused by installation, operation or storage of the fan that is outside the specifications and limitations contained in the AirVolution-D installation and operation instructions.

Technical Support

For installation assistance, application questions, technical sales support & any other inquiries, please contact our technical support team at (866) 668-3247.

AirVolution D
By MacroAir