Instructions – Parts List

Parts

Electronic Pulse Meters

308245N

For use with petroleum-based lubricants only.

1500 psi (10.3 MPa, 103 bar) Maximum Working Pressure

EFC (Electronic Fluid Commander):
Model No. 223655, Series C, Replacement Pulse Module
Model No. 236763, Series A, Pulse Module and Meter (pints, quarts, gallons)
Model No. 236764, Series A, Pulse Module and Meter (liters)

Horizon™:
Model No. 239367, Series A, Replacement Pulse Module
Model No. 238618, Series A, Pulse Module and Meter (pints, quarts, gallons, liters)

Important Safety Instructions
Read all warnings and instructions in this manual.
Save these instructions.

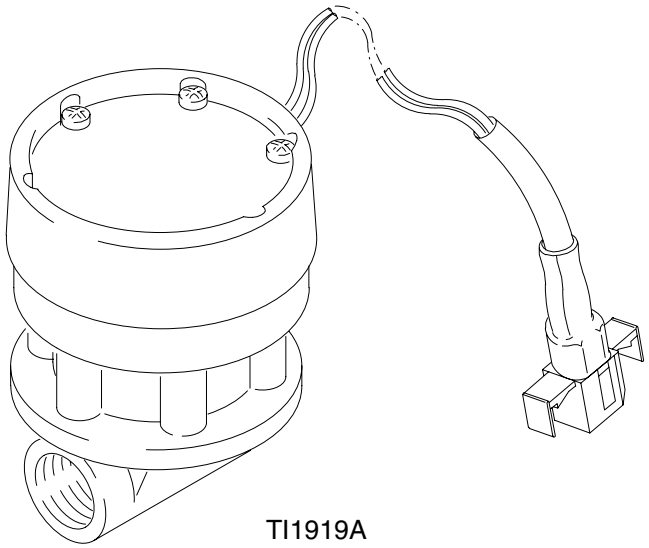

TI1919A

HO03

GRACO, INC. P.O. Box 1441 MINNEAPOLIS, MN 55440–1441

PROVEN QUALITY. LEADING TECHNOLOGY.

Installation

⚠ WARNING

To reduce the risk of serious injury, including electric shock or splashing fluid in the eyes or on the skin, always follow this procedure before servicing any part of the metering system and before checking for loose or shorted wires.

1. Turn off the control, and unplug it.
2. Shut off the power to the pump(s).
3. Relieve the fluid pressure.

⚠ CAUTION

To avoid damaging the electronic components of the pulse meter module (1)

- Do not lay anything on the module.
- Be sure the open side of the pulse module faces up if you lay it down.
- Do not twist or force parts. Align parts properly as instructed.

NOTE: All pulse meters are bi-directional.

To Install or Remove the Complete Pulse Meter

1. Observe the Warning and Caution above.
2. Disconnect the cable from the pulse module, taking note of the wiring polarity.
3. Remove the old pulse meter and install the new one, observing the original wiring polarity.

To Replace the Electronic Pulse Module

4. Observe the Warning and Caution at left.
5. If you are replacing the pulse module, disconnect the cable, taking note of the wiring polarity.
6. Remove the screws, and lift off the pulse module.
7. Install a new pulse module (1). Align the notch on the side of the pulse module with the notch on the side of the metering unit. Use the new screws and torque them oppositely and evenly to 3 to 5 in-lb (0.34 to 0.57 N.m). See Fig. NO TAG.
8. Connect the pulse module wires to the cable, observing the original wiring polarity.

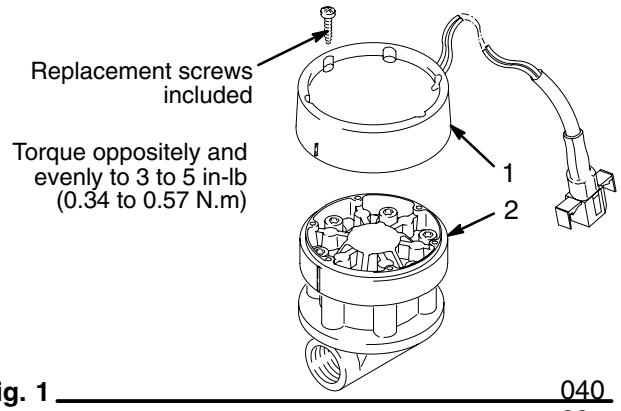

Fig. 1 040 89

To Verify the Accuracy of a Pulse Meter Module

1. Use a clean, calibrated container. If using a single container, be sure to clean it after each dispense.
2. Have pump air pressure at the lowest possible setting for dispensing fluid.
3. Put the tip of the nozzle at the bottom of the calibrated container.
4. If the tip of the dispense valve does not reach the bottom of the calibrated container, use a length of plastic tubing over the tip of the nozzle to ensure liquid enters the container from the bottom.
5. Trigger the gun slowly so the fluid immediately covers the tip of the dispense valve.
6. Dispense 1 quart of fluid according to the metered display on the dispense valve.
7. Allow product to sit for 20 minutes, then compare the actual, physical measurement in the calibrated container to the measurement displayed on the meter.

NOTE: The procedure above will determine if the meter is accurately dispensing the product and minimize testing errors. Some variance may occur depending on the viscosity of the fluid. If this procedure determines that the meter is not accurate, recalibrate the meter as described in the service manual or replace the meter or the electronics as necessary.

Parts

Electronic Pulse Meter – EFC
Model 236763, Series A
Measures in pints, quarts, or gallons

1	223655	Electronic Pulse Module	1
2	*	Metering Unit *(cannot be ordered separately)*	1

Electronic Pulse Meter – EFC
Model 236764, Series A
Measures in liters

1	223655	Electronic Pulse Module	1
2	*	Metering Unit *(cannot be ordered separately)*	1

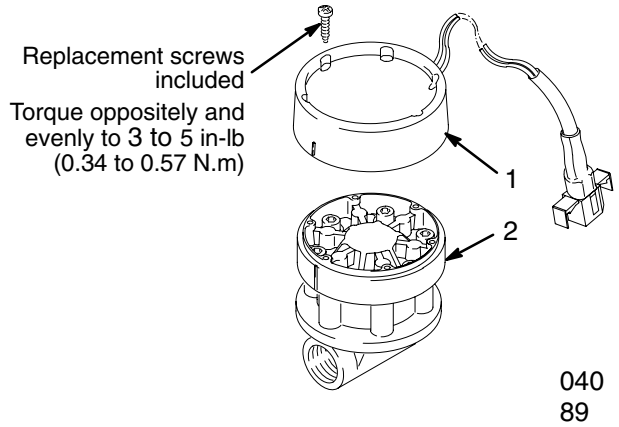

Wire Color	Function
Red	Power
Black	Ground

Electronic Pulse Meter – Horizon
Model 238618, Series A
Measures in pints, quarts, gallons, or liters

1	239367	Electronic Pulse Module, Horizon	1
2	*	Metering Unit *(cannot be ordered separately)*	1

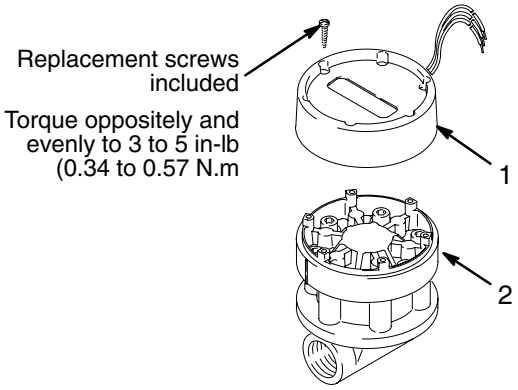

Wire Color	Function
Red	Power
Black	Ground
White	Signal

NOTE: 238618 Electronic Pulse Meter may be used in place of 236763, but do not use the white wire.

Technical Data

Category	Data
Electrical input voltage	15 V maximum
Current loop output	*Models 236763, 236764:* 4 milliamps OFF 10 milliamps ON
Voltage loop output	*Model 238618:* 0 V OFF, 15 V maximum ON
Wiring gauge required	*Models 236763, 236764:* Up to 200 ft (61 m), 18 AWG 2 Wire 90 Volt 201–500 ft (61.3–152.4 m), 16 AWG 2 Wire 90 Volt 501–1000 ft (152.7–305 m), 14 AWG 2 Wire 90 Volt *Model 238618:* Up to 50 ft (15.3 m), 18 AWG Shielded 3 Cable
Maximum fluid flow (see Pressure Drop Chart)	12 gpm (45.6 lpm) maximum
Maximum operating pressure	1500 psi (10.3 MPa, 103 bar)
Inlet/Outlet	1/2 npt

Pressure Drop Chart

			Pulse Meter Pressure Loss (Flow Rate – gpm)											
Crankcase Viscosity	Gear Viscosity	ISO No.	1	2	3	4	5	6	7	8	9	10	11	12
5w	——	22	4	8	14	19	25	32	37	43	51	58	66	74
10w	——	32	6	12	20	28	36	46	54	63	74	85	96	108
ATF	——	——	7	15	25	35	45	57	67	79	92	106	120	135
Hyd.	——	46	9	17	29	40	52	66	78	91	106	122	138	155
20w	——	68	13	25	42	59	76	100	115	134	157	181	204	229
30w	——	100	19	37	62	87	112	144	169	197	231	266	300	337
40w	——	150	28	56	94	131	169	216	253	295	347	398	450	506
50w	90w	220	41	82	137	192	247	316	371	433	509	584	660	742
——	——	320	60	120	200	280	360	460	540	630	740	850	960	1080
——	140w	460	86	172	287	402	517	661	776	906	1064	1222	1380	

The above table indicates the actual pressure drop through the bare meter at 70° F. The shaded area indicates a flow rate for a given fluid that may not be a good choice for a cost effective system.

Notes

Graco Standard Warranty

Graco warrants all equipment manufactured by Graco and bearing its name to be free from defects in material and workmanship on the date of sale to the original purchaser for use. With the exception of any special, extended, or limited warranty published by Graco, Graco will, for a period of twelve months from the date of sale, repair or replace any part of the equipment determined by Graco to be defective. This warranty applies only when the equipment is installed, operated and maintained in accordance with Graco's written recommendations.

This warranty does not cover, and Graco shall not be liable for general wear and tear, or any malfunction, damage or wear caused by faulty installation, misapplication, abrasion, corrosion, inadequate or improper maintenance, negligence, accident, tampering, or substitution of non–Graco component parts. Nor shall Graco be liable for malfunction, damage or wear caused by the incompatibility of Graco equipment with structures, accessories, equipment or materials not supplied by Graco, or the improper design, manufacture, installation, operation or maintenance of structures, accessories, equipment or materials not supplied by Graco.

This warranty is conditioned upon the prepaid return of the equipment claimed to be defective to an authorized Graco distributor for verification of the claimed defect. If the claimed defect is verified, Graco will repair or replace free of charge any defective parts. The equipment will be returned to the original purchaser transportation prepaid. If inspection of the equipment does not disclose any defect in material or workmanship, repairs will be made at a reasonable charge, which charges may include the costs of parts, labor, and transportation.

THIS WARRANTY IS EXCLUSIVE, AND IS IN LIEU OF ANY OTHER WARRANTIES, EXPRESS OR IMPLIED, INCLUDING BUT NOT LIMITED TO WARRANTY OF MERCHANTABILITY OR WARRANTY OF FITNESS FOR A PARTICULAR PURPOSE.

Graco's sole obligation and buyer's sole remedy for any breach of warranty shall be as set forth above. The buyer agrees that no other remedy (including, but not limited to, incidental or consequential damages for lost profits, lost sales, injury to person or property, or any other incidental or consequential loss) shall be available. Any action for breach of warranty must be brought within two (2) years of the date of sale.

Graco makes no warranty, and disclaims all implied warranties of merchantability and fitness for a particular purpose in connection with accessories, equipment, materials or components sold but not manufactured by Graco. These items sold, but not manufactured by Graco (such as electric motors, switches, hose, etc.), are subject to the warranty, if any, of their manufacturer. Graco will provide purchaser with reasonable assistance in making any claim for breach of these warranties.

In no event will Graco be liable for indirect, incidental, special or consequential damages resulting from Graco supplying equipment hereunder, or the furnishing, performance, or use of any products or other goods sold hereto, whether due to a breach of contract, breach of warranty, the negligence of Graco, or otherwise.

FOR GRACO CANADA CUSTOMERS
The parties acknowledge that they have required that the present document, as well as all documents, notices and legal proceedings entered into, given or instituted pursuant hereto or relating directly or indirectly hereto, be drawn up in English. Les parties reconnaissent avoir convenu que la rédaction du présente document sera en Anglais, ainsi que tous documents, avis et procédures judiciaires exécutés, donnés ou intentés à la suite de ou en rapport, directement ou indirectement, avec les procedures concernées.

Graco Information

TO PLACE AN ORDER, contact your Graco distributor, or call one of the following numbers to identify the distributor closest to you:

1–800–533–9655 Toll Free
612–623–6928
612–378–3590 Fax

All written and visual data contained in this document reflects the latest product information available at the time of publication. Graco reserves the right to make changes at any time without notice.

MM 308245

Graco Headquarters: Minneapolis
International Offices: Belgium, Korea, China, Japan

www.graco.com

308245 09/1992, Revised 06/2006